Bonfiglioli

AxiaAgile Series

ADVANCED STANDARD DRIVE

We engineer dreams

Contents

THE HIGHEST LEVEL OF PRECISION, EFFICIENCY AND ENERGY OPTIMIZATION 4

A COMPLETE INTEGRATED SOLUTION FOR ALL INDUSTRIAL APPLICATIONS 5

BONFIGLIOLI DIGITAL TOOLS 6

BONFIGLIOLI FREQUENCY INVERTERS AND SERVO DRIVES 7

AXIAAGILE SERIES 8

APPLICATIONS 9

AXIAAGILE SYSTEM RANGE 10

AXIAAGILE KEY FEATURES AND BENEFITS 11

AXIAAGILE ORDER & DESIGNATION CODE 12

ADVANCED STANDARD DRIVE WITH VARIANT FLEXIBILITY TO ADAPT TO THE APPLICATION ... 14

SYSTEM OVERVIEW 15

AXIAAGILE SPECIFICATIONS 16

AXIAAGILE CONNECTIVITY 17

AXIAMANAGER 18

AXIAMANAGER PLC 21

COMMUNICATION INTERFACES 22

KEYPAD AND USB CONNECTIONS 23

MEMORY MODULE 24

ENCODER INTERFACE 25

GENERAL TECHNICAL DATA 26

- AXA20 | Technical Data (from 0.25 to 2.2 kW) 27
- AXA20 | Technical Data (from 3.0 to 7.5 kW) 28
- AXA40 | Technical Data (from 0.25 to 2.2 kW) 29
- AXA40 | Technical Data (from 3.0 to 11.0 kW) 30

CONTROL TERMINALS 31

MOUNTING OF STANDARD DEVICES 32

- Mounting of Frame Size 1 33
- Mounting of Frame Size 2 34
- Mounting of Frame Size 3 35

EMC SCREEN SHEET 36

LINE CHOKE 37

EMI FILTERS 41

BOOK TYPE EMI FILTERS 42

BRAKING RESISTORS 44

OUR STRIVING FOR THE FUTURE 46

OUR CONSTANT AMBITION 47

GLOBAL PRESENCE 48

The highest level of precision, efficiency and energy optimization

With more than 20 years of experience in creating tailored and forward-thinking motion control systems, Bonfiglioli has proven to be a reliable partner as **one-stop shop for mechatronic applications** in industrial automation.
Bonfiglioli engineering specialists work side by side with customers to develop dedicated integrated solutions, covering the entire motion drive train according to an **Industry 4.0 approach**.
Thanks to the extensive know-how and the long-term collaboration with key customers, our centers of excellence develop **breakthrough mechatronic innovations**, including low-backlash planetary gearboxes, servomotors, open-loop and closed-loop inverters, servo drives and energy regenerative units.

This, combined with a comprehensive range of **Professional Services**, enables us to respond to customers' requests by:

- providing **user-friendly, plug & play solutions**
- **increasing** applications' **efficiency** and **productivity**
- designing **flexible, modular solutions** targeted to a wide range of applications
- granting access to real-time data for **diagnostic, maintenance** and **predictive analytics**

ASSESSMENT & RECOMMENDATION | ENGINEERING & PLANNING | INSTALLATION & COMMISSIONING | RETROFIT & UPGRADE | MAINTENANCE & REPAIR

FULLY COMMITTED TO EFFICIENCY

Bonfiglioli technical sales experts support customers with a proactive, flexible and dedicated approach **throughout the system's entire life cycle**.

- **Assessment and recommendation**: our team provides support starting from the very early stage of the project by assessing the requirements and developing a targeted analysis of the application, guiding customers in the choice of the most suitable components for their drive solution.
- **Engineering and planning**: our experts work with customers to co-engineer their application, offering consultancy in sizing, fine tuning and selecting the optimized drive train, always considering life cycle cost optimization.
- **Installation and commissioning**: we partner with our customers to ensure a quick, cost-effective and successful installation, optimizing the benefits and functions of their drive technology.
- **Retrofit and upgrade**: we update customers' machines with state-of-the-art technology to ensure constant levels of productivity, reliability and performance.
- **Maintenance and repair**: we work side by side with customers to avoid failures, reduce downtimes and ensure the best system operation.

A complete integrated solution for all industrial applications

Our engineering specialists **work side by side with customers** to create the most effective solution, whether the request is to optimize an existing machine or to develop a new one. Our relationship with customers is based on an **active partnership** with fast decision-making processes to develop individually tailored offers.
Our full-range and modular offering provides the necessary products for the development of vertically integrated solutions in **a variety of sectors**, such as material handling, automated storage, textile and packaging. Our team of experts assists customers in designing cost-effective and energy-efficient machines, aligning performance to meet the specific requirements.

A COMPLETE INTEGRATED SOLUTION

- Precision Planetary Gearboxes
- Industrial Gearboxes
- Permanent Magnet Synchronous Motors
- Synchronous Reluctance Motors
- Asynchronous Motors
- Servo Drives
- Frequency Inverters
- Energy Regenerative Inverters
- Motion Control
- Industry 4.0 solutions

INDUSTRY SECTOR EXPERTISE

- MATERIAL HANDLING
- HOIST & CRANES
- FOOD & BEVERAGE
- AUTOMATED WAREHOUSE
- PACKAGING
- TEXTILES
- MATERIAL WORKING

Bonfiglioli digital tools

Thanks to a powerful set of **software tools** and **online platforms**, developed through partnerships with the main market leaders, Bonfiglioli enables its customers to **engineer tailored applications** in a smooth and productive way: the components selection and sizing, as well as the design of the whole motion drive train, are made simpler and more reliable.

In addition, thanks to its in-depth knowledge of industrial solutions, **Bonfiglioli engineering team is ready to assist customers** in their selection and design process, providing high quality technical support for specific application developments.

SMART SIZER

COMPLETE SIZING FOR DRIVE AND TRANSMISSION SOLUTIONS

Smart Sizer is a software tool that supports customers in sizing **fully integrated multi-axis servo systems**, including motors, gear units and servo drives, for up to 50 axes in either shared or independent configurations.
With Smart Sizer, customers can select, size and design their own customised, high-performance applications.
In addition, the Bonfiglioli engineering team, drawing on its in-depth product expertise, uses Smart Sizer to provide a high-quality customer support service, developing optimised, energy-efficient and tailored engineering solutions to meet individual requirements.

SHOP

PRODUCT CONFIGURATION AND ORDER ASSISTANT

Bonfiglioli's **complete e-business system** guides customers, distributors and agents through the process of **selecting the right product** for their specific needs, and provides support for **design activities** and **order management**, greatly accelerating the selection and ordering process and improving accuracy.
Thanks to this web-based technology, customers can get in touch with Bonfiglioli technical service anytime from anywhere around the world.

EPLAN

ENHANCE YOUR ELECTRICAL DESIGN

Bonfiglioli and EPLAN work together to **provide efficient engineering solutions**, aimed at reducing the gap between the initial concept and its development, programming and commissioning, thanks to:

- Always up-to-date device data and documentation
- Easy drag-and-drop function to develop optimized electrical drawings.

Bonfiglioli frequency inverters and servo drives

THE RIGHT SOLUTION FOR A WIDE SPECTRUM OF APPLICATIONS

Our wide portfolio of frequency inverters and servo drives provides **unprecedent levels of flexibility** across a variety of sectors:

- compatibility with a wide range of motors types
- scalable control performances from basic to demanding applications
- wide power range (from 0.25 to 1,200 kW)
- extensive input/output connectivity
- support of major fieldbus protocols.

Whether in the textile industry, packaging, material working, automated storage or other sectors, our frequency inverters and servo drives are **optimized for numerous applications**.

Our team of experts constantly works with the aim of providing **innovative and highly performant solutions**, introducing continuous improvements in terms of better control of your processes, lower energy consumption, improved productivity and user experience.

HIGHEST ENERGY EFFICIENCY

Our frequency inverters and servo drives portfolio fulfil the **highest IE2 efficiency class** in compliance with the **EN 61800-9-2 EcoDesign** regulation, for the reduction of energy consumption and the impact on the environment connected to industrial production.

Our drives give a major contribution to **energy consumption optimization and to energy saving** in the entire plant. Several **included functions** are available through parameter setup, allowing to reduce the electrical energy needed to power motors, such as standby mode and automatic flux reduction.

TOP-LEVEL USER EXPERIENCE

All our drives provide **intuitive engineering software** and **user-friendly programming interfaces** for parameter setting, diagnostic and supported commissioning.

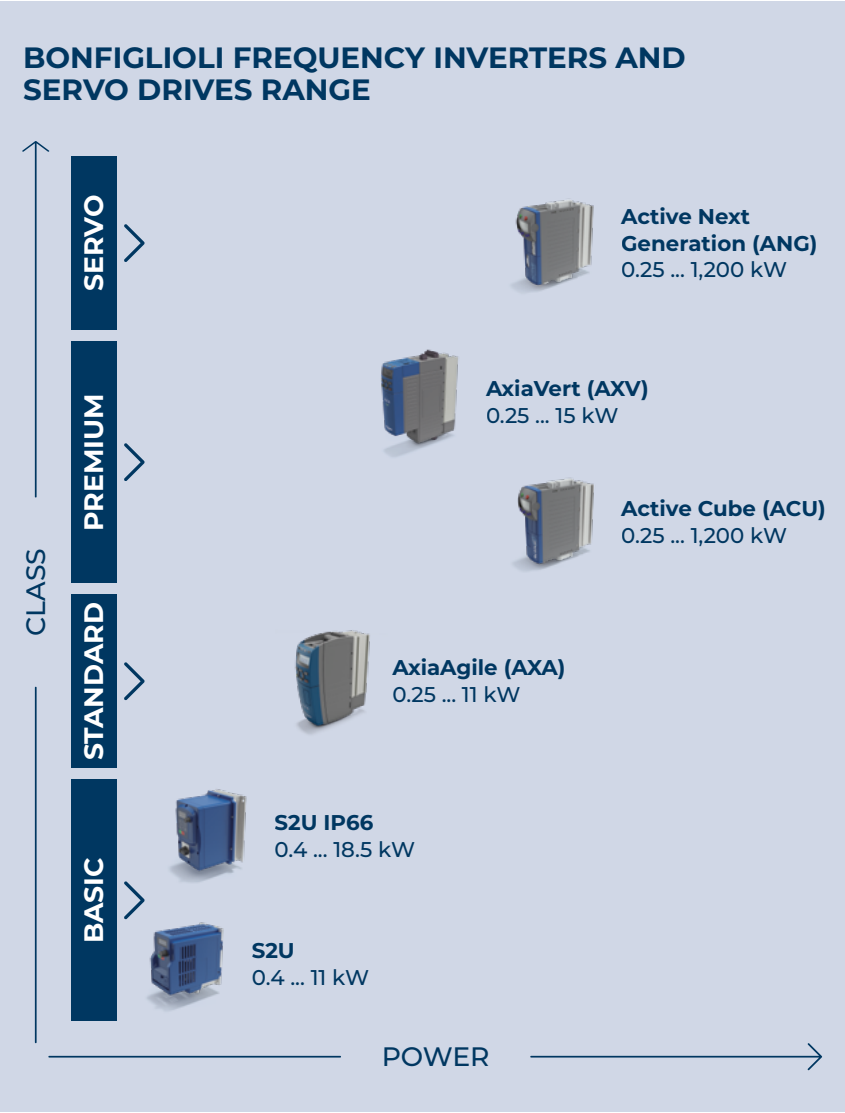

AxiaAgile series

The Bonfiglioli AxiaAgile (AXA) series is designed for medium-level performance applications, offering a range of features for various types of machinery. Four variants are available to provide a technical and commercial fit, covering different communication protocols including CANopen and Industrial Ethernet. The variants also include Safe Torque Off and an integrated incremental encoder evaluation. The intuitive GUI allows quick commissioning and monitoring of the device and connected motor. Motor control for different types of motor, with or without motor feedback, provides maximum flexibility in selecting the right drive train.

The series includes:

- 3 phase 400V mains: 0.25 - 11 kW
- 3 phase 230V mains: 0.18 - 7.5 kW (in preparation)
- 1 phase 230V mains: 0.09 - 3 kW (in preparation)

Applications

EXCELLENT SPEED AND TORQUE CONTROL FOR RELIABLE OPERATION

AxiaAgile inverters can be used in all areas of industry, but are particularly suited to the following medium-performance applications, where control performance must also consider commercial aspects. Thanks to its variant concept, different technical and commercial requirements can be met, providing the right product with the right combination of features.
Its wide compatibility with different motor controls (asynchronous, permanent magnet synchronous and synchronous reluctance) and communication protocols makes the AxiaAgile the right fit for many different kinds of applications.

AxiaAgile is the perfect component for a Bonfiglioli drive train solution.

AUTOMATED STORAGE

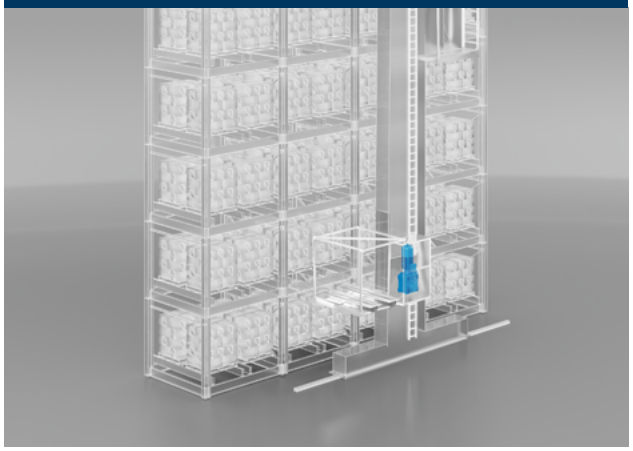

WOODWORKING

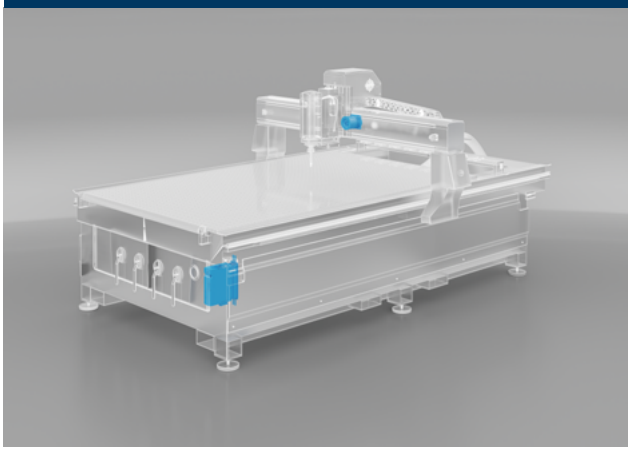

FOOD & BEVERAGE

TEXTILE

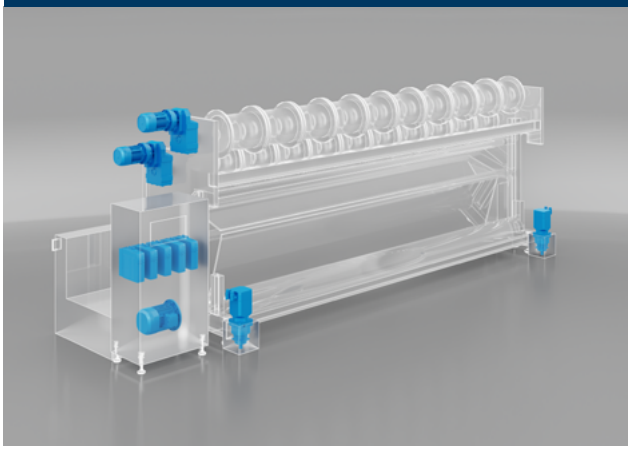

AxiaAgile system range

DEVELOP YOUR OPTIMIZED, FULLY INTEGRATED SOLUTION WITH AXIAAGILE AND THE COMPLETE PRODUCT RANGE FROM BONFIGLIOLI

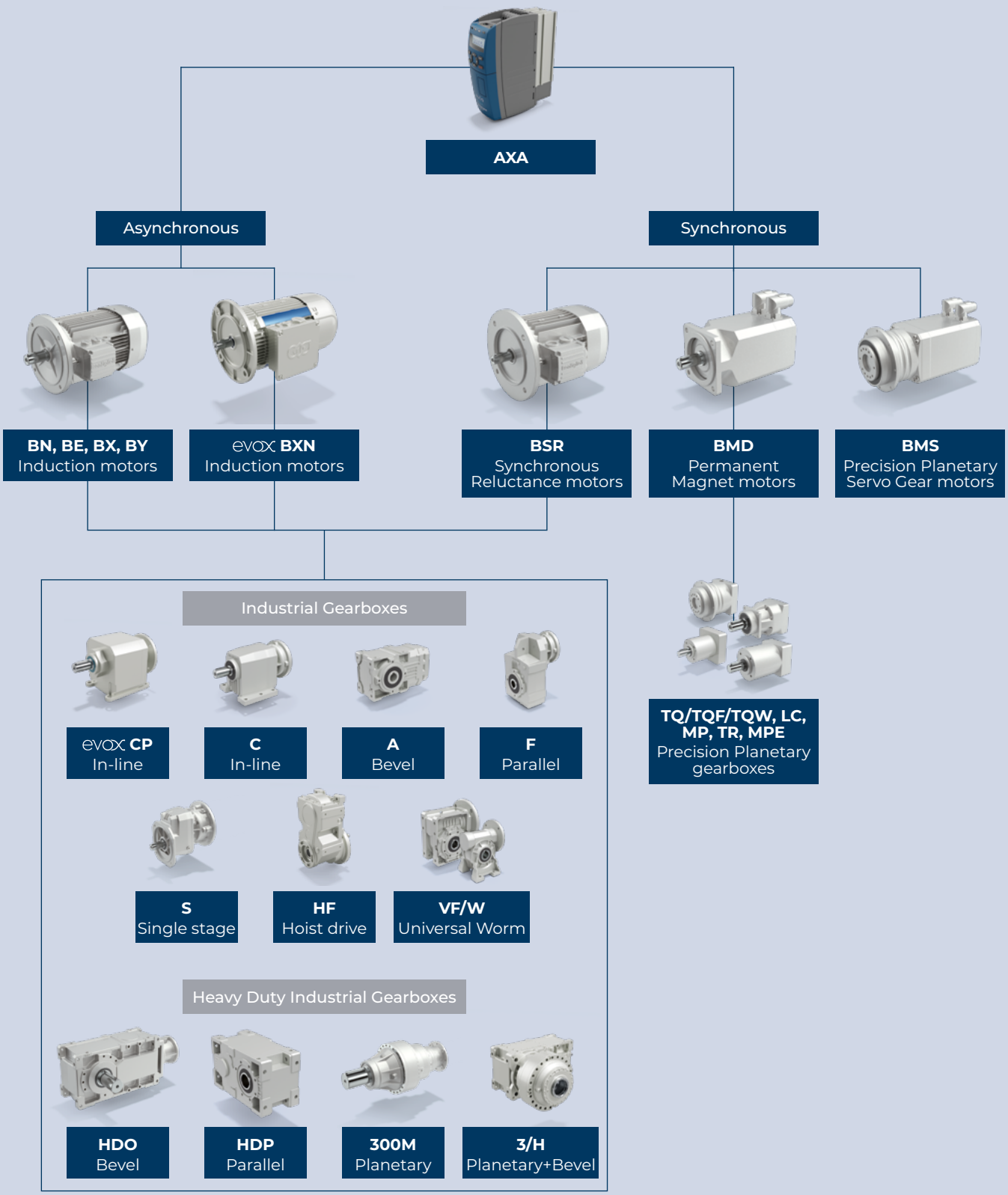

AxiaAgile key features and benefits

HIGH CONTROL PERFORMANCE & VERSATILE VARIANT CONCEPT FOR A WIDE SPECTRUM OF APPLICATIONS

AxiaAgile series offers different variants to fit features and functionalities for various specific requirements of applications across sectors and to different degrees of complexity:

FLEXIBLE COMMUNICATION PROTOCOLS COMPLYING WITH AUTOMATION AND INDUSTRY 4.0 STANDARDS

Smooth integration into automation networks thanks to the **compatibility with a wide range of fieldbus protocols and machine controllers**.
Dedicated communication and monitoring functions fostering the **optimization of production** and **increasing the efficiency** of the entire application.

INTEGRATED FUNCTIONAL SAFETY

Safe Torque Off and **Safe Stop 1** (in preparation) are integrated into the AxiaAgile series for optimized functional safety integration, therefore reducing potential hazardous behavior of the machinery for persons, property and environment.

HIGH ACCURACY IN SPEED, POSITION AND TORQUE CONTROL WITH OR WITHOUT ENCODER FEEDBACK

The smooth and accurate motion control for **open-loop and closed-loop applications** maximizes the machine efficiency and productivity. Therefore, manufacturing capabilities are expanded **for a wide range of motion requirements**, including high speed motors, multi-feedback and multi-motor applications.

VARIANT CONCEPT FOR COMMERCIAL FIT

The different variants of AxiaAgile are the base for **economic and technical fitting**. Select from a base of 4 variants with the additional freedom degree for the integration of user interfaces like keypad, Bluetooth integration, PC connection and mechanical mounting variants, therefore adapting the AxiaAgile exactly to your application.

INTEGRATED DEVICE AND APPLICATION MONITORING

Diagnostics, alarm management, predictive maintenance on the motion chain components and at machine level, allowing:

- reduction in maintenance costs
- reduction in machine failures and downtime
- lower stock of spare parts
- longer service life of parts
- increased efficiency and productivity improved operator safety

SUPPORTED CONTROL OF WIDE RANGE OF MOTOR TYPES WITH VERSATILE CONTROL FEATURES

Great process versatility thanks to **high compatibility with a wide range of motors** (asynchronous, permanent magnet synchronous, synchronous reluctance) and **reliable embedded motion and control features**, making the drive optimal for many different applications.

GRAPHICAL USER INTERFACE FOR PC AND MOBILE DEVICES, WIRED AND WIRELESS CONNECTIVITY (USB, BLUETOOTH), GRAPHICAL KEYPAD

High-end user experience thanks to user friendly graphic interfaces, allowing the **guided startup, commissioning and tuning** of the inverter, the motion chain components and the application, **in both online and offline mode**, also in wireless and mobile connection.
Performance monitoring, optimization and servicing also from remote location.
High level of security and simplicity in device management thanks to the availability of different access levels and user profiles.

AxiaAgile order code & designation code

AXA	4	0	3	B	K25

Power rating

K25	0.25 kW	**3K0**	3.0 kW
K37	0.37 kW	**4K0**	4.0 kW
K55	0.55 kW	**5K5**	5.5 kW
K75	0.75 kW	**7K5**	7.5 kW
1K1	1.1 kW	**9K2**	9.2 kW
1K5	1.5 kW	**11K**	11.0 kW
2K2	2.2 kW		

Functional Safety

- **X** No Functional Safety
- **B** Safe Torque Off (STO)
- **S** STO+SS1+FSoE (future update)

Design type

- **1** Basic: No communication, no PLC
- **3** Standard: CANopen, no PLC
- **6** Enhanced: Industrial Ethernet, PLC (future update)
- **8** Advanced: Industrial Ethernet + CAN, PLC

Application Reference

- **0** Standard
- **A** Application specific

Voltage

- **2** 1/3 x 230 VAC
- **4** 3 x 400/480 V AC

Inverter series AxiaAgile

1	X	A	3	0000

Internal Reference

0000 Reserved for future use

TN/IT mains bridge / Brake Chopper [1]

3 (Standard) Bridge for TN mains pre-assembled / With Brake Chopper

Cooling

A Standard cooling

C ColdPlate (development in progress)

Filter [2]

X Without Integrated Filter

Frame sizes

1 Frame size 1

2 Frame size 2

3 Frame size 3

(1) Frame sizes 1...3 have an accesible jumper, which can be used to change from TN mains to IT mains operation.

(2) For an overview of device and filter combinations for the respective EMC classifications, refer to the operating instructions.

Advanced standard drive with variant flexibility to adapt to the application

The **flexibility** of AxiaAgile adapts to **specific applications across different sectors**, with varying levels of complexity, thanks to the available **variants:**

AxiaAgile Basic (1X) is the Axia platform entry level inverter. Its economic design features integration into classical IO integrated systems for easy and quick set-up, at the same time offering all the flexibility required for different types of motor control support.

AxiaAgile Standard (3B) is the right compromise, adding Safe Torque Off (STO) and CANopen communication to optimize the drive for simple installations that demand these features in a safe working environment.

AxiaAgile Enhanced(1) (6S) is the versatile inverter offering extended Functional Safety features including Safe Torque Off and integrated Safe Stop 1 (SS1) combined with multi protocols Industrial Ethernet communication.

AxiaAgile Advanced (8B) is the all-round device offering Safe Torque Off (STO), CANopen, Industrial Ethernet protocols and TTL encoder evaluation along with CiA402 positioning capabilities.

Features	Basic 1X	Standard 3B	Enhanced[1] 6S	Advanced 8B
Included IOs	4 digital inputs; 2 digital inputs/outputs; 2 multifunction inputs 1 multifunction output; DC 24 V input; DC 24 output			
CAN included	-	CANopen / Systembus	-	CANopen / Systembus
Industrial Ethernet	-	-	EtherCAT PROFINET EtherNet/IP Modbus/TCP	EtherCAT PROFINET EtherNet/IP Modbus/TCP
Functional Safety	-	STO (SIL 3, PL e, cat.3)	STO SS1(1) FSoE(1) (SIL 3, PL e, cat.3)	STO (SIL 3, PL e, cat.3)
HTL encoder evaluation	Via digital inputs	Via digital inputs	Via digital inputs	Via digital inputs
TTL encoder evaluation	-	-	-	Yes
Integrated Logic functions	Yes	Yes	Yes	Yes
Integrated IEC61131 PLC	-	-	Yes	Yes
Motor control	Asynchronous, permanent magnet synchronous, synchronous reluctance			
Mechanical mounting	Wall mounting, Feedthrough, ColdPlate, Antivibration[1]			
Power connection	AC mains input; DC terminals Brake chopper for Brake resistor connection			
Accessories	Detachable keypad; Brake resistors Line chokes; EMC filters			

(1) Future update.

System overview

The Variant concept to fit for a wide range of applications.

Discover the right variant matching your machinery requirements:

- Different frame sizes and electrical power sizes for different mains voltages
- Different mounting variants and options allow optimum mechanical designs for the electrical cabinet and cooling concepts (Wall mounting with Air Cooling, Feed-Through mounting, ColdPlate and Vibration resilient mounting kit for Air Cooling devices)
- Safe Torque Off integrated in variants 3B Standard, 6S Enhanced[1] and 8B Advanced
- Safe Stop 1 and FailSafe over EtherCAT integrated in variant 6S Enhanced[1]
- Integrated PLC for freely programmable application adjustments in variants 6S Enhanced[1] and 8B Advanced
- Optional Keypad* Module with USB-C compatible connector for PC connection
- Optional Bluetooth* Module for connection to PC or mobile phone
- Integrated CAN communication with CANopen and Systembus support in variants 3B Standard and 8B Advanced
- Integrated Industrial Ethernet support (e.g. EtherCAT, PROFINET, Ethernet/IP) in variants 6S Enhanced[1] and 8B Advanced
- HTL encoder evaluation available via digital inputs
- TTL encoder evaluation supported in variant 8B Advanced
- Memory module to allow quick exchange of the device in high-availability installations
- Accessories to select from, such as: mains chokes, filters, brake resistors
- Optional Cable sets for connection to BMD motors

(*) Keypad and Bluetooth Module cannot be used at the same time

Multiprotocol Ethernet based Fieldbus

Memory:
Indirect firmware update
Fieldbus firmware
PLC-program
Enhanced & advanced: already included.
Basic, standard: optionally extendable

Optional interfaces (service)
Keypad (Standard with USB-C)
Keypad (Basic without USB-C)
Bluetooth

Encoder I/O extension
TTL encoder evaluation

16 pin customer connection (Std. I/O)
4 DC 24 V IN (daisy chain)
4 HTL (GND + A/B/Z)
2 MFI (Motor temp. 0...20mA, 0...10V)
1 GND analog
1 DC 24V OUT
1 GND
2 Dig. IN/OUT (Touchprobe)
1 MFO (Out. PWM, 10V)

CAN
Isolated, daisy chain 6 pin

STO - 4 pin customer connector
2 STOA (daisy chain)
2 STOB (daisy chain)

(1) Future update.

Axiaagile specifications

(VARIANT-DEPENDING ONBOARD FEATURES)

The following specifications are covered through the available variants onboard for each size and power range

MECHANICAL & ELECTRICAL

- **Compact** book-shape **design** for easy integration in electrical cabinets
- **Plug-in control terminals** for easy and fast connection
- **DC link bus** for "energy sharing" in multidrive system architectures
- Integrated **brake transistor** for **brake resistor connection** on all sizes by default

AUTOMATION

- **Freely programmable** and pre-setup **I/Os**
- **HTL encoder evaluation** via I/Os
- **TTL encoder evaluation**
- Freely programmable **Relay output**
- **External DC 24V supply input** for control board supply from backup systems with easy daisy-chaining connector
- **Deactivation** and **Reactivation of internal EMC** filters (for example for operations in IT mains) with a jumper bridge
- Proprietary **Systembus** for easy integration of electronic gear applications (depending on variant)

MOTOR CONTROL

- Vector Control of **asynchronous** motors, **synchronous** motors and **synchronous reluctance** motors (all with or without encoder feedback)
- V/f Control of **asynchronous** motors
- **Preset values** for Bonfiglioli motors to reduce commissioning times
- **Auto-tuning** for advanced motor parameters
- **Auto-tuning** for angle determination (Resolver or absolute encoder) for Synchronous motors
- **Motor thermal evaluation**

FIELDBUS INTERFACES

- **CANopen** Fieldbus communication with **daisy chaining capability**
- **Industrial Ethernet commuication** (EtherCAT, PROFINET, Ethernet/IP and other)

APPLICATION CONTROL

- **Motor chopper** function to increase braking power without brake resistors
- **4** independent **data sets**
- **Flying restart**
- **Spindle control** with tool change positioning
- **Electronic gear** with optional phasing
- **PID control** for example for process controlling
- **Intelligent current limits**
- **Configurable power failure management** for controlled ramping down

MOTION CONTROL INTERFACE

- **Configurable high speed control loops** for position control and speed control
- **Motion control interface** with **CiA402** support for easy integration with external PLC
- **S-ramps** selection with separate adjustable acceleration/deceleration and jerk limitation

MONITORING & DIAGNOSIS

- Up to **4 multicolor LEDs** for signaling **device status**, fieldbus status and Functional Safety status
- Adjustable **motor protection** functions · Overload protection and automatic best switching frequency adjustment
- **Phase monitoring** (motor and mains)
- **Encoder monitoring**
- **Mean and peak values storage**
- **Fault register** (application and device)

USER INTERFACE

- Optional keypad extension , **PC connection** (wireless, via USB-C, or via Ethernet) or **mobile App** (wireless)
- **User management** (different access levels for parameterization)

SECURE COMMUNICATION

- **Secure Communication** by design with TLS encryption and Authentication management for user interactions via local, remote and IIoT connectivity

AxiaAgile Connectivity

COMMUNICATION AND INDUSTRY 4.0 READINESS

The advanced digital and open communication protocols complying with automation and Industry 4.0 standards allow a **smooth integration into automation networks** thanks to the compatibility with a **wide range of fieldbus protocols**. **Communication encryption** is embedded by design in the AxiaAgile to ensure **secure communication**.
Thanks to the embedded resources and communication capabilities, it is possible to gather and elaborate data regarding **the device status and energy monitoring** which are subsequently processed through **statistical analysis** for real-time **diagnostics**, alarm management, **predictive maintenance** on the motion chain components and at machine level, allowing to reduce maintenance costs, machine failures and downtime and to increase the safety, efficiency and productivity and improve the spare part handling and the service friendliness.

COMMISSIONING AND MONITORING MADE EASY

The AxiaAgile series offers **different options for tuning and diagnostic**:

- a **mobile App**, available for iOS and Android with Bluetooth connection
- a **keypad** with USB-C compatible connection and MMC to store inverter files that can be exchanged with another AxiaAgile inverter or a PC
- a **PC GUI** with cable-bound (USB or Ethernet) or Bluetooth connection

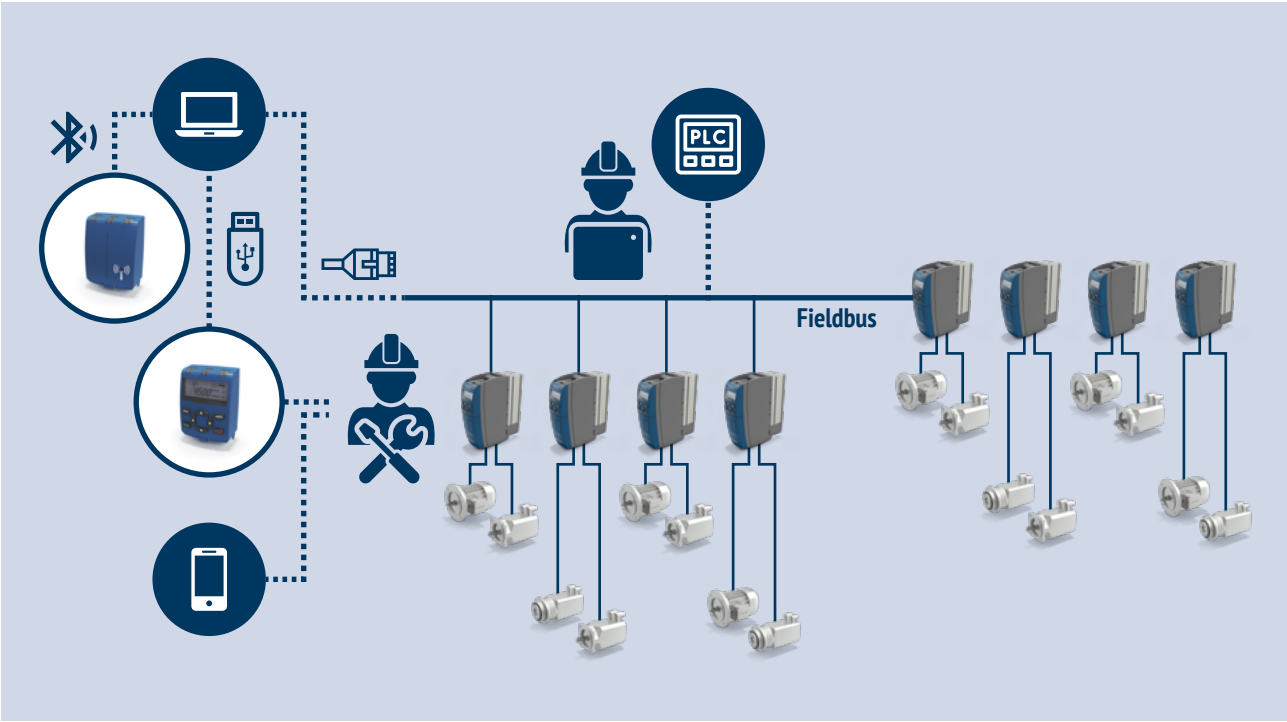

AxiaManager

AxiaManager is the **engineering software** for the **planning, commissioning**, **operation** and **monitoring** of the Axia inverter platform (e.g. AxiaVert,, AxiaAgile inverters series), providing a range of practical tools to manage the resources of the Axia inverter platform completely and efficiently.
AxiaManager is available as a **Windows PC GUI** and as a **mobile App** for an instant access to the drive status and configuration with a **simplified user interface**.
Characterized by a **top-level user experience** and available in Simple and Advanced mode, it offers **optimized workflows** for both occasional and professional users, ensuring marked savings in terms of time and costs thanks to **accelerating engineering**. In addition, users can count on the support from a Bonfiglioli expert from commissioning to troubleshooting thanks to the **online remote support** function.

SAVE TIME thanks to the top-level user experience and intuitive navigation for accelerated engineering

GET THE SUPPORT YOU NEED thanks to real-time remote support from a Bonfiglioli expert

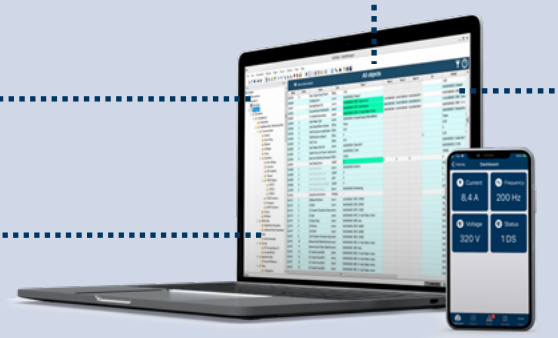

INCREASE EFFICIENCY by developing optimized, integrated solutions

REDUCE COMPLEXITY thanks to a unique tool for planning, commissioning, tuning and monitoring your automation projects

AXIAMANAGER FOR PC

AxiaManager is available as a **Windows PC GUI**, where the computer is connected to the inverter through **optional cable** (USB or Ethernet) or **Bluetooth connection**.

PLAN, CONFIGURE AND CONNECT

With AxiaManager for PC it is possible to **commission entire automation systems including multiple inverters** through an **easy guided procedure**, both in **online mode** by choosing the connection interface and its parameters to scan the available inverters, and in **offline mode** by selecting the inverters from the catalogue.

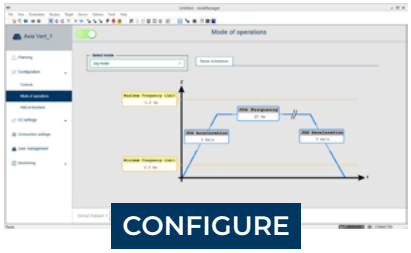

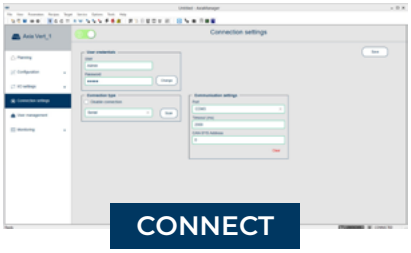

AXIAMANAGER FOR PC

The **planning section** allows to add, edit and remove components such as:

- Motors
- Gearboxes
- Encoder feedback

The **configuration phase** allows to set both the inverter driving tasks via the control mode (V/f, FOC) and the control source objects (I/O, keypad, etc...), and the inverter mode of operation via interactive graphs.
The **connection settings** page displays prefilled fields, which can optionally be modified in manual mode. By scanning for online inverters, you have an instantaneous field population with actual inverter data values.

TUNING

By switching to the Advanced mode, users can access **the parameter and object view** which allows several functions for a more in-depth analysis and tuning, such as:

- Reading/writing/setting default object values
- Writing only the modified parameters not yet present in the inverter
- Resetting all the default values and objects and to restart the inverter
- Filtering and showing/hiding objects by specific criteria (for example by name, object or description)
- Setting the value of one parameter's dataset in all its other datasets
- Creating recipes with sets of configuration objects for specific applications. These recipes can be saved and later applied to other inverters performing the same operations.

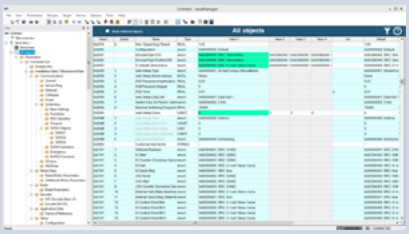

MONITORING

The monitoring functionality in the PC GUI Advanced view is displayed through the **monitor window** and the **graph window**. It is possible to easily drag & drop objects from the tabular view of one or more connected inverters to the related monitoring window and to save the monitored objects in a file for future use.

In the graph window, two different oscilloscope functions are available.
The **free-run oscilloscope** for commissioning and troubleshooting analysis allows collecting **unlimited number of samples** for up to **4 tracks**.
The oscilloscope function is available also in a **real-time** version, offering a high time and trigger resolution and allowing the simultaneous supervision at high frequency sampling of **1,000 samples** for up to **4 variables**, such as commissioning variables, variables to monitor performance levels or to tune the control loops.

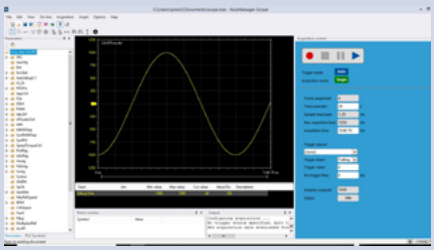

AxiaManager

AXIAMANAGER MOBILE APP

The AxiaManager Mobile App provides **easy-to-use parameterization**, **diagnostic dialogs** and an **intuitive graphical user interface**, allowing you to keep the necessary overview of your applications in every situation.

AxiaManager Mobile App for iOS allows connection to the AxiaAgile inverters via optional **Bluetooth connection**.

EASY AND FAST ACCESS TO PRODUCT INFORMATION

The AxiaManager Mobile App gives you access to the drive status and configuration with a simplified user guidance. The App displays a list of the main parameters relative to all the devices included in the connected applications. A **user-friendly navigation menu** supports you in all machine adjustments and parameters modifications, allowing a **constant and quick optimization** of your applications.

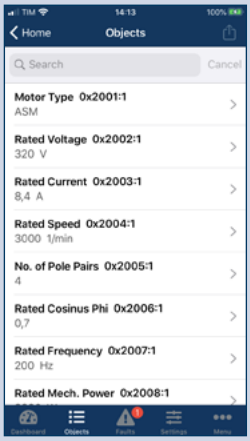

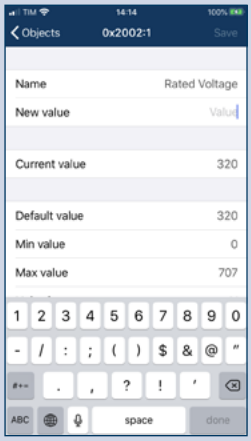

MONITORING AND TROUBLESHOOTING ON THE GO

The App provides **access to your products within the range of the bluetooth connection** in the form of **concise dashboards** for a quick monitoring of the current status of the AxiaAgile inverters.

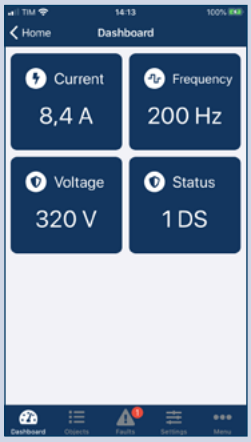

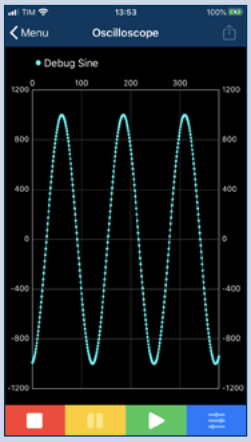

The mobile App displays the **fault history** stored on the connected inverter, showing it in a simple list. From the main list the user can select a particular fault to view the related details or delete all faults.

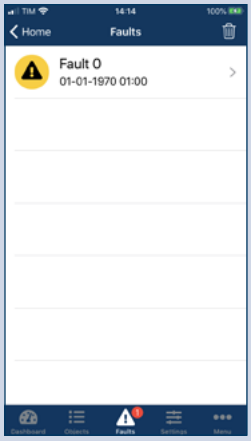

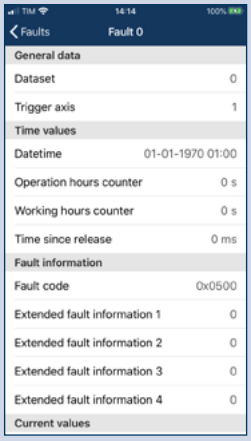

AxiaManager PLC

The standard functions of AxiaAgile frequency inverters can be flexibly extended through an **integrated internal PLC**, programmable with a high-end PC software interface to write, compile, download and debug the applications autonomously developed by the user. The AxiaManager PLC allows a **flexible and effective management of automation tasks** characterized by different degrees of complexity through **complete personalization** of the drives and a **user-friendly** and **powerful graphic interface**.

- **IEC61131-3 standard:** AxiaManager PLC supports all the graphical and textual programming languages defined by the IEC 61131-3 standard, including basic data types, structures, arrays and user-defined data types.
  All the 5 languages (Instruction List, Ladder diagram, Function Block diagram, Sequential Function Chart and Structured Text) according to the IEC 61131-3 standard can be used simultaneously within the same application, so that the most suitable language can be selected for each software module.
- **Top-level user experience:** an intuitive navigation and the drag and drop of parameters directly from the AxiaManager GUI provide a fast and easy design of control sequences.
- **Highest efficiency for the most demanding application:** the generated executable code written according to the IEC 61131-3 standard is translated directly into machine code, thus making the program execution as efficient as possible also for time-critical applications.
- **Development supporting tools:** AxiaManager PLC integrates a series of diagnostic tools supporting the application debugging, its setting and optimization. It allows the display, both numerical and graphical, of all drive and application variables which have been configured through the drag-and drop mode.
  Through a dedicated window, users can define **triggers** in code locations in order to display the value of selected variables at runtime, without the need of stopping the application. In addition users can insert **breakpoints** and the support for **single-step execution** is also available.
  AxiaManager PLC supports the **live debug** function, highlighting any programming errors and displaying them in a dedicated window during the compiling process for all the programming languages. The detected error position and cause are displayed with a direct link to the relative program section to be analyzed.
  The integrated **simulator** allows executing and debugging the whole application on the PC through a digital twin of the system without the need of physical hardware.

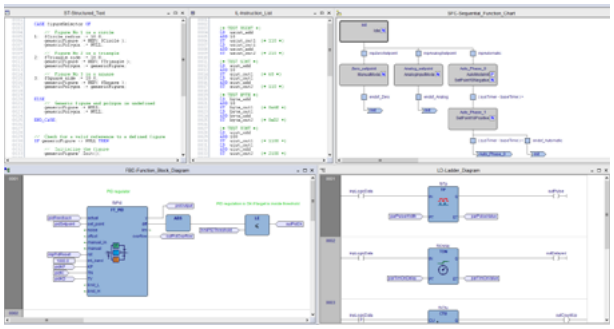

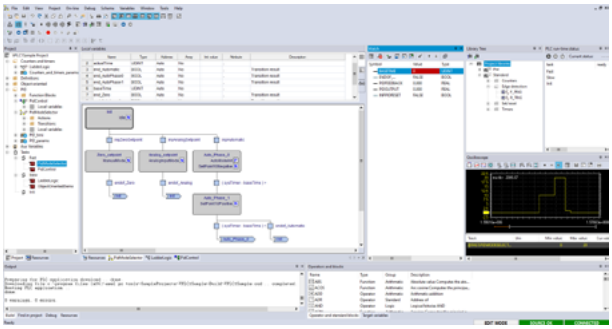

Communication interfaces

Having the right communication interface is a necessity for easy and smooth integration into industrial communication. AxiaAgile offers different communication interfaces for the specific requirements of the application.

All supported communication interfaces are already onboard depending on the drive variant. Inside the variants 6S Enhanced[1] and 8B Advanced variant the Industrial Ethernet interface supports with multi-protocol an easy switch between the supported protocols.

Fieldbus	Physical interfaces	3B Standard	6S Enhanced (Future update)	8B Advanced
EtherCAT	2 RJ45 connectors	-	Yes, Multi-protocol interface	Yes, Multi-protocol interface
PROFINET				
Ethernet/IP (in preparation)				
Ethernet TCP/IP				
Modbus/TCP				
CANopen	6 pin-connector for daisy chaining	Yes	-	Yes

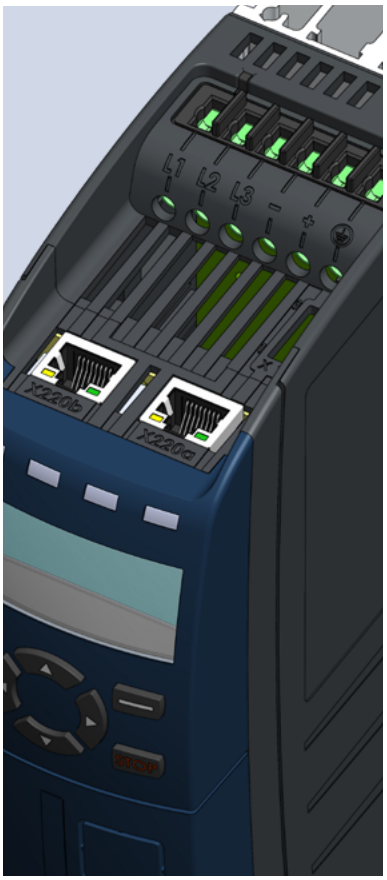

(1) Future update.

Keypad and usb connections

The keypads KPA-DSP-01 and KPA-DSP-11 are universal tools in the daily operation of the AxiaAgile device. A graphical backlit LCD display with 4 lines of text display makes the work with the AxiaAgile series quick and efficient.

The functions are:

- Access to all relevant device objects for diagnosis and setup
- Fault analysis with dedicated Fault lists
- Guided Motor setup, Communication Setup and Application Setup
- Copy Function to store and load the device object settings to a file on the module (KPAA-DSP-01)
- MMC slot for memory extensions for language support and parameter storage (KPAA-DSP-01)

The integrated USB-C compatible connector enables the communication with a PC (KPAA-DSP-01).

Bluetooth/wireless module

The Remote Access Module REAA-WL-01 allows a very user-friendly connection to a PC or a mobile phone via Bluetooth.

The connection of Bluetooth using the PC and AxiaManager Software offers the same functionality as a USB connection.

Also the REAA-WL-01 extends the functionality of Bluetooth to connect with the AxiaManager Mobile App dedicated for iOS and Android smartphones.

Memory module

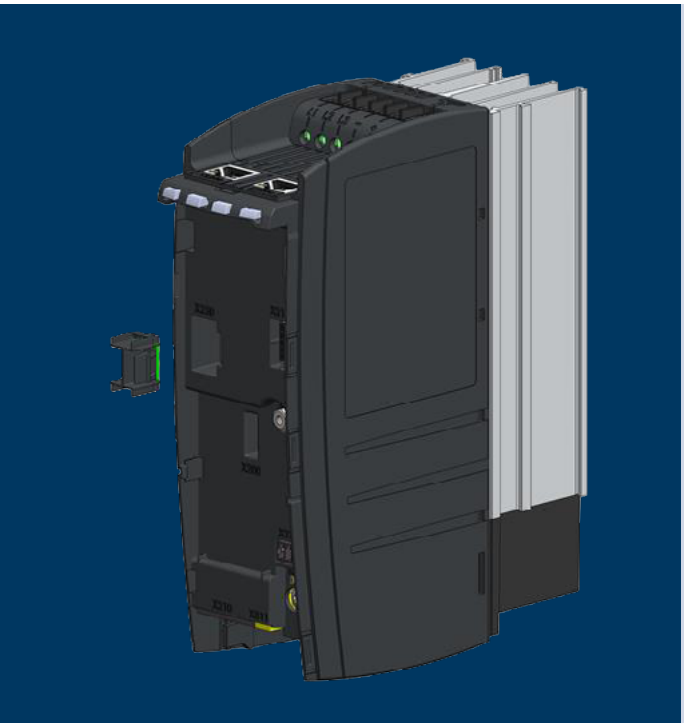

In the variants 6S Enhanced(1) and 8B Advanced the memory module is always pre-installed. The memory module is required to store a PLC program and is required to change the communication interface of the multi-protocol Industrial Ethernet communication interface.

In variants 1X and 3B the memory module is optional available and can be used for permanent parameter backup so that an exchange of the device can be easily realized (future update).

(1) Future update.

Encoder interface

All AxiaAgile variants support the evaluation of HTL encoders via digital inputs for speed control.
The AxiaAgile variant 8S Advanced supports in addition also the evaluation of TTL encoders for Speed Control & Position Control.

SYSTEM DESCRIPTION

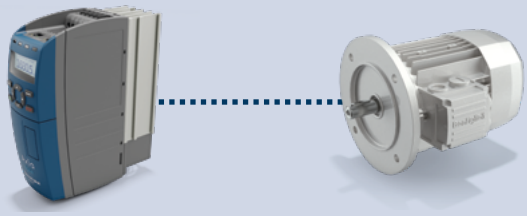

Contact	8S ADVANCED VARIANT TTL
Housing	PE
1	
2	
3	B-
4	B+
5	TM_{PTC} –
6	V_{Enc}
7	R-
8	
9	A-
10	TM_{PTC} +
11	$V_{Enc, Sense}$
12	R+
13	
14	A+
15	GND

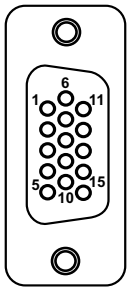

General technical data

ENVIRONMENT

Operating conditions

- 0 ... 40°C (40 ... 55°C with derating)
- Pollution Degree 2
- Climatic class during operation 3K22 (EN60721-3-3), formerly 3K3
- Relative humidity 5% ... 95%, no condensation
- Overvoltage Category III for mains connection
- Overvoltage Category III for relay connector circuit up to 2000 m
- Overvoltage Category II for relay connector circuit above 2000 m

Altitude of installation

- Up to 1000m (up to 3000m with derating)

Protection degree (EN 60529)

- IP20 with correctly mounted covers and connection terminals

Environmental operation conditions according to DIN EN 60721-3-3:

- 3Z1 (negligible thermal radiation)
- 3B1 (no biological impact)
- 3C1 (chemically active substances, limits as per standard)
- 3S1 (mechanically active substances, no sand in air, limits as per standard)
- 3M4 (mechanical vibration and shocks, limits as per standard)

Storage conditions

- According to EN50178

Robustness

- Vibration robustness according to DIN EN 60068-2-6: Test Fc and DIN EN 60068-2-27: Test Ea

Interference immunity

- According to EN 61800-3 for use in industrial environments

ELECTRICAL

MAINS VOLTAGE OPERATION

- AXA20 in the range AC 1~/3~ 184-0% ... 240 V+10%
- AXA40 in the range AC 3~ 380-15% ... 480 V+10%

Rated mains frequency

- 45 ... 66 Hz

Overload current / Peak current

- 150% Rated current for 60 s
- 200% Rated current for 1 s

Electric protection

- Short-circuit / Earth fault proof

Braking transistor

- Built-in by default

CONFORMITY AND CERTFICATES

CE conformity:

- 2014/35/EU (Low voltage directive)
- 2014/30/EU (Electromagnetic Compatibility Directive)
- 2011/65/EU + 2015/863/EU (RoHS Directive)
- 2009/125/EC (Ecodesign Directive) & 2019/1781/EU (Ecodesign implementation commission regulation)

UL/CSA approval:

- UL61800-5-1/CSA 22.2-No 274

FUNCTIONAL SAFETY

- EN61800-5-2 (Adjustable speed electrical power drive systems - Safety requirements - Functional)

AXA20

Technical Data (from 0.25 to 2.2 kW)

AXA20xx			k25	k37	k55	k75	1k1	1k5	2k2
			Size 1 (FA or FC)						
Output, motor side[1]									
Recommended rated motor power 3ph	P_n	kW	0.25	0.37	0.55	0.75	1.1	1.5	2.2
	P_n	HP	0.33	0.5	0.75	1	1.5	2	3
Rated motor current output 3ph	I_n	A	1.5	2.0	3.0	3.5	5.0	6.0	9.0
Overload current (60 s) 3ph	I_{OL}	A	2.25	3.0	4.5	5.25	7.5	9.0	13.5
Peak current (1 s) 3ph	I_{pk}	A	3.0	4.0	6.0	7.0	10.0	12.0	18.0
Recommended rated motor power 1ph	P_n	kW	0.12	0.18	0.25	0.37	0.55	0.75	1.1
	P_n	HP	0.18	0.25	0.37	0.5	0.75	1	1.5
Rated motor current output 1ph	I_n	A	1.0	1.3	1.5	2.0	3.0	3.5	5.0
Overload current (60 s) 1ph	I_{OL}	A	1.5	1.95	2.25	3.0	4.5	5.25	7.5
Peak current (1 s) 1ph	I_{pk}	A	2.0	2.6	3.0	4.0	6.0	7.0	10.0
Rated motor voltage output	U_n	V	3 x (from 0 to mains voltage)						
Min. braking resistance	R	Ω	100	100	100	100	100	37	37
Switching Frequency	F_c	kHz	2, 4, 8[1] & 16[1]						
Output frequency	F_n	Hz	0...599[2]						
Input, mains side									
Rated mains voltage	U	V	230						
Working voltage range	U	V	184...240 + 10 %						
Rated current 3 ph, IEC	I	A	1.4	2.0	2.5	3.4	4.9	6.5	9.5
Rated current 1 ph/N; 2 ph IEC	I	A	1.9	2.5	3.0	4.2	5.3	7.6	11.2
Terminals									
Connection Signal terminals[1]	A	mm^2	0.25 ... 1.5 (detachable terminals)						
Connection Power relay[1]	A	mm^2	0.1 ... 1.5 (detachable terminal)						
Connection Power terminals[1]	A	mm^2	0.2 ... 4 (flexible with sleeve) / 0.2 ... 6 (rigid)						
General									
Short circuit/ground fault protection	-	-	Measures against overload and short-circuit integrated in the device						
Mounting position	-	-	Vertical						
Dimensions Standard Device	HxWxD	mm	200 x 60 x 170						
Dimensions ColdPlate Device	HxWxD	mm	200 x 83 x 130						
Weight (approx.) Standard Device	m	Kg	1.0						
Weight (approx.) ColdPlate Devie	m	Kg	1.0						
Brake chopper	-	-	Internal brake chopper						
UL/CSA approval	-	-	In preparation						
Environment									
Cooling temperature	T_n	°C	Nominal values from 0 to 40°C / up to 55°C with derating						
Relative air humidity	r_H	%	From 5 to 95, non-condensing						
Fan Cooling	-	-	No						
Options & accessories									
Screen sheet for cable screens	-	-	SCR-AXA CRTL						
Feed through mounting kit	-	-	MPSV1-AGL						
Input line choke[3]	-	-	External (depending on mains supply)						
EMI filter[3]	-	-	For selection of EMI related components, please check the Input filter table in this catalogue						

Notes:
(1) Check the technical data document for additional data
(2) Higher frequencies available on request
(3) For more details, please check the Input filter table/EMI table in this catalogue

AXA20

Technical Data (from 3.0 to 7.5 kW)

AXA20xx			3k0	4k0	5k5	7k5
			Size 2 (FA or FC)		Size 3 (XA or XC)	
Output, motor side[1]						
Recommended rated motor power 3ph	P_n	kW	3.0	4.0	5.5	7.5
	P_n	HP	4.0	5.5	7.5	10
Rated motor current output 3ph	I_n	A	12.0	15.0	21.0	26.0
Overload current (60 s) 3ph	I_{OL}	A	18.0	22.5	31.5	39.0
Peak current (1 s) 3ph	I_{pk}	A	24.0	30.0	42.0	52.0
Recommended rated motor power 1ph	P_n	kW	1.5	2.2	3.0	3.0
	P_n	HP	2.0	3.0	3.0	4.0
Rated motor current output 1ph	I_n	A	6.0	9.0	12.0	12.0
Overload current (60 s) 1ph	I_{OL}	A	9.0	13.5	18.0	18.0
Peak current (1 s) 1ph	I_{pk}	A	12.0	18.0	24.0	24.0
Rated motor voltage output	U_n	V	3 x (from 0 to mains voltage)			
Min. braking resistance	R	Ω	18.5	18.5	18.5	18.5
Switching Frequency	F_c	kHz	2, 4, 8[1] & 16[1]			
Output frequency	F_n	Hz	0...599[2]			
Input, mains side						
Rated mains voltage	U	V	230			
Working voltage range	U	V	184...240 + 10 %			
Rated current 3 ph, IEC	I	A	12.5	17.0	22.5	30.0
Rated current 1 ph/N; 2 ph IEC	I	A	14.2	19.5	26.7	26.7
Terminals						
Connection Signal terminals[1]	A	mm^2	0.25 ... 1.5 (detachable terminals)			
Connection Power relay[1]	A	mm^2	0.1 ... 1.5 (detachable terminal)			
Connection Power terminals[1]	A	mm^2	0.2 ... 4 (flexible with sleeve) / 0.2 ... 6 (rigid)			
General						
Short circuit/ground fault protection	-	-	Measures against overload and short-circuit integrated in the device			
Mounting position	-	-	Vertical			
Dimensions Standard Device	HxWxD	mm	200 x 80 x 196		200 x 125 x 205	
Dimensions ColdPlate Device	HxWxD	mm	200 x 103 x 148		200 x 148 x 140	
Weight (approx.) Standard Device	m	Kg	1.4		2.8	
Weight (approx.) ColdPlate Devie	m	Kg	-		-	
Brake chopper	-	-	Internal brake chopper			
UL/CSA approval	-	-	In preparation			
Environment						
Cooling temperature	T_n	°C	Nominal values from 0 to 40°C / up to 55°C with derating			
Relative air humidity	r_H	%	From 5 to 95, non-condensing			
Fan Cooling	-	-	Yes			
Options & accessories						
Screen sheet for cable screens	-	-	SCR-AXA CRTL			
Feed through mounting kit	-	-	MPSV2-AGL		MPSV3-AGL	
Input line choke[3]	-	-	External (depending on mains supply)			
EMI filter[3]	-	-	For selection of EMI related components, please check the Input filter table in this catalogue			

Notes:
(1) Check the technical data document for additional data
(2) Higher frequencies available on request
(3) For more details, please check the Input filter table/EMI table in this catalogue

AXA40

Technical Data (from 0.25 to 2.2 kW)

AXA40xx			k25	k37	k55	k75	1k1	1k5	2k2
			Size 1 (FA or FC)						
Output, motor side[1]									
Recommended rated motor power	P_n	kW	0.25	0.37	0.55	0.75	1.1	1.5	2.2
	P_n	HP	0.33	0.55	0.75	1.0	1.5	2.2	3.0
Rated motor current output 400 V	I_n	A	0.8	1.2	1.5	2.1	3.0	4.0	5.5
Rated motor current output 480 V	I_n	A	0.7	1	1.3	1.8	2.5	3.3	4.6
Rated motor voltage output	U_n	V	3 x (from 0 to mains voltage)						
Overload current (60 s) 400 V	I_{OL}	A	1.2	1.8	2.3	3.2	4.5	6.0	8.2
Peak current (1 s) 400 V	Ip_k	A	1.6	2.4	3.0	4.2	6.0	8.0	11.0
Min. braking resistance	R	Ω	300	300	300	300	300	220	220
Switching Frequency	F_c	kHz	2, 4, 8[1] & 16[1]						
Output frequency	F_n	Hz	0...599[2]						
Input, mains side									
Rated mains voltage	U	V	400						
Working voltage range	U	V	380-15 % ... 480 + 10 %						
Rated current 3 ph, 400 V	I	A	0.8	1.2	1.8	2.4	2.8	3.3	5.8
Rated current 3 ph, 480 V	I	A	0.7	1.0	1.5	2.0	2.3	2.8	4.8
Terminals									
Connection Signal terminals[1]	A	mm^2	0.25 ... 1.5 (detachable terminals)						
Connection Power relay[1]	A	mm^2	0.1 ... 1.5 (detachable terminal)						
Connection Power terminals[1]	A	mm^2	0.2 ... 4 (flexible with sleeve) / 0.2 ... 6 (rigid)						
General									
Short circuit/ground fault protection	-	-	Measures against overload and short-circuit integrated in the device						
Mounting position	-	-	Vertical						
Dimensions Standard Device	HxWxD	mm	200 x 60 x 170						
Dimensions ColdPlate Device	HxWxD	mm	200 x 83 x 130						
Weight (approx.) Standard Device	m	Kg	1.0						
Weight (approx.) ColdPlate Devie	m	Kg	1.0						
Brake chopper	-	-	Internal brake chopper						
UL/CSA approval	-	-	In preparation						
Environment									
Cooling temperature	T_n	°C	Nominal values from 0 to 40°C / up to 55°C with derating						
Relative air humidity	r_H	%	From 5 to 95, non-condensing						
Fan Cooling	-	-	No						
Options & accessories									
Screen sheet for cable screens	-	-	SCR-AXA CRTL						
Feed through mounting kit	-	-	MPSV1-AGL						
Input line choke[3]	-	-	External (depending on mains supply)						
EMI filter[3]	-	-	For selection of EMI related components, please check the Input filter table in this catalogue						

Notes:
(1) Check the technical data document for additional data
(2) Higher frequencies available on request
(3) For more details, please check the Input filter table/EMI table in this catalogue

AXA40

Technical Data (FROM 3.0 TO 11 KW)

AXA40xx			3k0	4k0	5k5 [4]	7k5 [4]	5k5	7k5	9k2	11k
			Size 2 (FA or FC)				Size 3 (XA or XC)			
Output, motor side[1]										
Recommended rated motor power	P_n	kW	3.0	4.0	5.5	7.5	5.5	7.5	9.2	11
	P_n	HP	4.0	5.0	7.5	10	7.5	10	12.5	15
Rated motor current output 400 V	I_n	A	7.5	9.5	13.0	17.0	13.0	17.0	20.0	23.0
Rated motor current output 480 V	I_n	A	6.3	7.9	10.8	14.2	10.8	14.2	16.7	19.2
Rated motor voltage output	U_n	V	3 x (from 0 to mains voltage)							
Overload current (60 s) 400 V	I_{OL}	A	11.2	14.2	19.5	25.5	19.5	25.5	30.0	34.5
Peak current (1 s) 400 V	Ip_k	A	15.0	19.0	26.0	34.0	26.0	34.0	40.0	46.0
Min. braking resistance	R	Ω	106	106	48	48	48	48	48	48
Switching Frequency	F_c	kHz	2, 4, 8[1] & 16[1]							
Output frequency	F_n	Hz	0...599[2]							
Input, mains side										
Rated mains voltage	-	-	400							
Working voltage range	-	-	380-15 % ... 480 + 10 %							
Rated current 3 ph, 400 V	I	A	6.8	7.8	14.2	15.8	14.2	15.8	20.0	26.0
Rated current 3 ph, 480 V	I	A	5.7	6.5	11.8	13.2	16.7	13.2	16.7	21.7
Terminals										
Connection Signal terminals[1]	A	mm^2	0.25 ... 1.5 (detachable terminals)							
Connection Power relay[1]	A	mm^2	0.1 ... 1.5 (detachable terminal)							
Connection Power terminals[1]	A	mm^2	0.2 ... 4 (flexible with sleeve) / 0.2 ... 6 (rigid)							
General										
Short circuit/ground fault protection	-	-	Measures against overload and short-circuit integrated in the device							
Mounting position	-	-	Vertical							
Dimensions Standard Device	HxWxD	mm	200 x 80 x 196				200 x 125 x 205			
Dimensions ColdPlate Device	HxWxD	mm	200 x 103 x 148				200 x 148 x 140			
Weight (approx.) Standard Device	m	Kg	1.4				2.8			
Weight (approx.) ColdPlate Devie	m	Kg	-				-			
Brake chopper	U	V	Internal brake chopper							
UL/CSA approval	U	V	In preparation							
Environment										
Cooling temperature	T_n	°C	Nominal values from 0 to 40°C / up to 55°C with derating							
Relative air humidity	r_H	%	From 5 to 95, non-condensing							
Fan Cooling	-	-	Yes							
Options & accessories										
Screen sheet for cable screens	-	-	SCR-AXA CRTL							
Feed through mounting kit	-	-	MPSV2-AGL				MPSV3-AGL			
Input line choke[3]	-	-	External (depending on mains supply)							
EMI filter[3]	-	-	For selection of EMI related components, please check the Input filter table in this catalogue							

Notes:
(1) Check the technical data document for additional data
(2) Higher frequencies available on request
(3) For more details, please check the Input filter table/EMI table in this catalogue
(4) Devices in preparation.

Control terminals

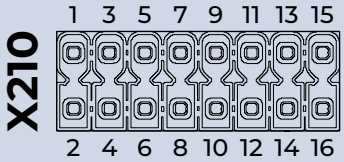

X210

2	DC 24 V In	1	DC 24 V In
4	GND	3	GND
6	DC 24 V out	5	IN1D: Digital Input 1
8	GND	7	IN2D: Digital Input 2
10	IN5D/OUT1D: Digital Input 5 / Digital output 1	9	IN3D: Digital Input 3
12	IN6D/OUT2D: Digital Input 6 / Digital output 2	11	IN4D: Digital Input 4
14	IN7D/MFO1/10V: Digital Input 7 / Multifunction Output 1 / DC 10 V out	13	MFI1: Multifunction Input 1
16	GND	15	MFI2 Multifunction Input 2

The digital inputs can be switched to either PNP or NPN logic.

The digital inputs IN1D, IN2D and IN3D can also be used for the evaluation of a HTL encoder.

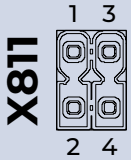

X811

Connector X811 is available in variants 3B Standard and 8B Advanced for Safe Torque Off.

2	SIN1D-A: Safe Torque Off	1	SIN1D-A: Safe Torque Off
4	SIN1D-B: Safe Torque Off	3	SIN1D-B: Safe Torque Off

Connector X811 is available in variants 6S Enhanced for Safe Torque Off & Safe Stop 1 (in preparation).

2	SIN1D-A: Programmable Safe Torque Off / Safe Stop 1	1	SIN1D-A: Programmable Safe Torque Off / Safe Stop 1
4	SIN1D-B: Programmable Safe Torque Off / Safe Stop 1	3	SIN1D-B: Programmable Safe Torque Off / Safe Stop 1

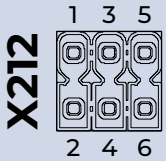

X212

Connector X212 is available in variants 3B Standard and 8B Advanced for CANopen communication. As alternative to the CANopen protocol, the Systembus protocol can be activated through parameterization.

2	COM+: CANopen+	1	COM+: CANopen+
4	COM-: CANopen-	3	COM-: CANopen-
6	COM-GND: GND	5	COM-GND: GND

Mounting of standard devices

A **wide range of mechanical accessories** is available for AxiaAgile series, to make **installation as easy as possible** in all sorts of applications.

In standard mountings, the unit can be **installed directly on the mounting plate or as feed-through unit** with optional mounting equipment.

The range of mounting variants also includes an **optional support with shielded brackets**, so that the right solution for all possible needs can always be found.

TYPES OF MOUNTING KITS MKA

The drive is supplied complete for fixing to an electrical cabinet mounting panel.
4 optional installation kits are additionally available.

MSTD (Standard Mounting Kit)

The Standard Mounting Kit is always included for devices for mounting version “A”.

MPSV

Feedthrough assembly for higher protection classes or enhanced cooling characteristics to allow the heat dissipation outside the control cabinet or to reduce the installation depth inside the electrical cabinet.

MKA-CP

Mounting kit for Coldplate mounting version “C”.

Mounting of frame size 1

AxiaAgile	Mounting	Description
AXA2xxxxxx**1**xxxxxxx **AXA4**xxxxxx**1**xxxxxxx	MSTD12-AGL	Standard mounting
	MPSV1-AGL	Feedthrough mounting
	MCP-AGL	ColdPlate mounting

MSTD12-AGL

(Standard mounting)

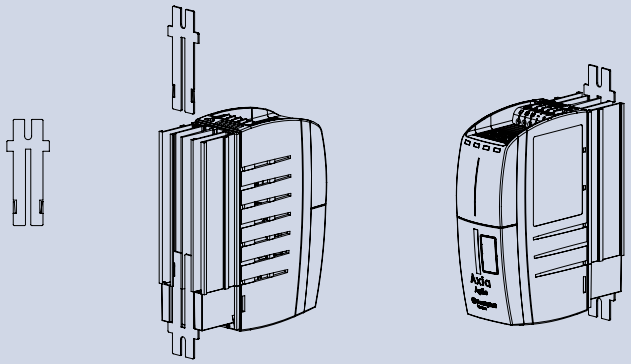

MPSV1-AGL

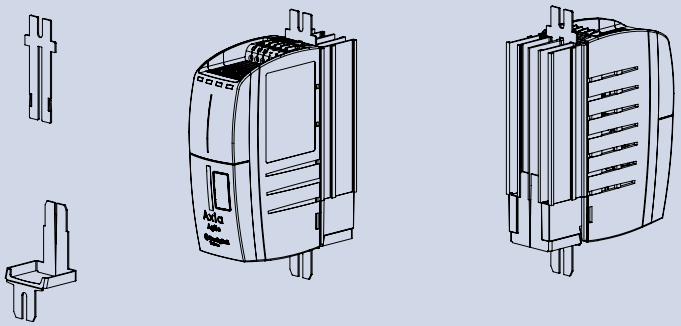

MCP-AGL

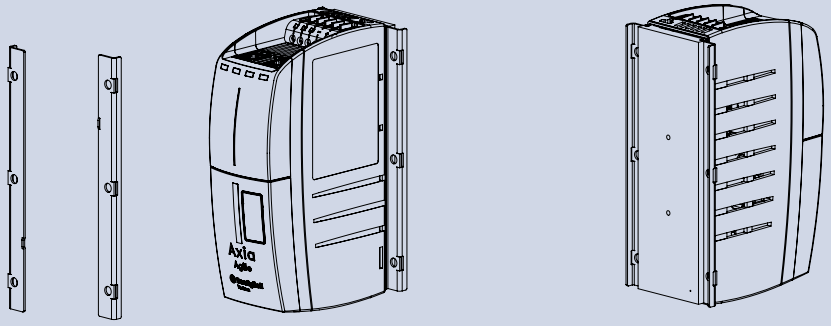

Mounting of frame size 2

AxiaAgile	Mounting	Description
AXA2xxxxxx**2**xxxxxxx **AXA4**xxxxxx**2**xxxxxxx	MSTD12-AGL	Standard mounting
	MPSV2-AGL	Feedthrough mounting
	MNVIB2-AGL	Vibration proofed mounting
	MCP-AGL	ColdPlate mounting

MSTD12-AGL

(Standard mounting)

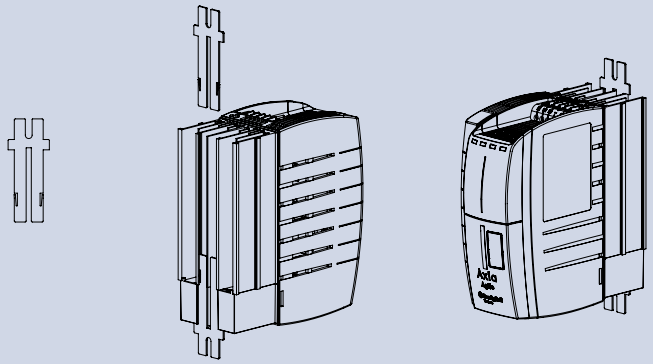

MPSV2-AGL

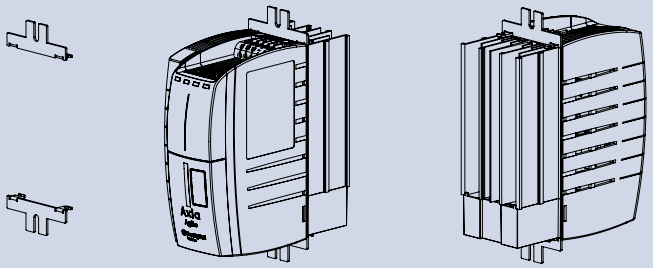

MCP-AGL

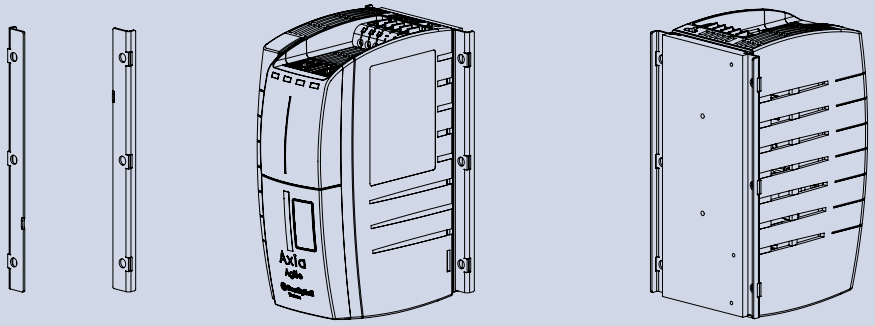

Mounting of frame size 3

AxiaAgile	Mounting	Description
AXA2xxxxxx**3**xxxxxxx **AXA4**xxxxxx**3**xxxxxxx	MSTD3-AGL	Standard mounting
	MPSV3-AGL	Feedthrough mounting
	MNVIB3-AGL	Vibration proofed mounting
	MCP-AGL	ColdPlate mounting

MSTD3-AGL

(Standard mounting)

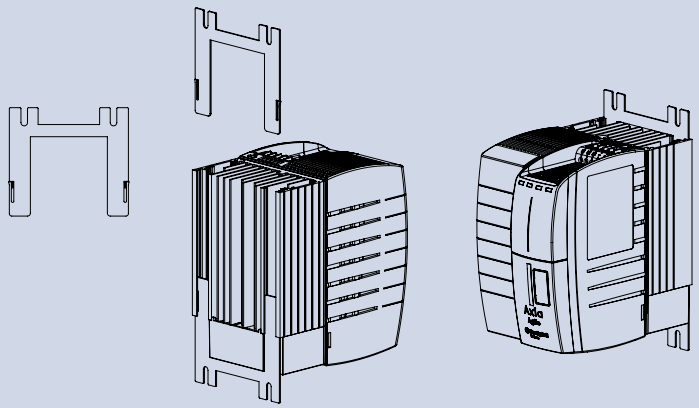

MPSV3-AGL

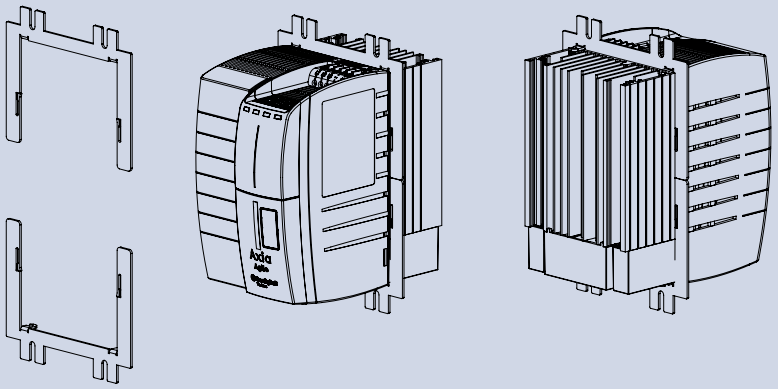

MCP-AGL

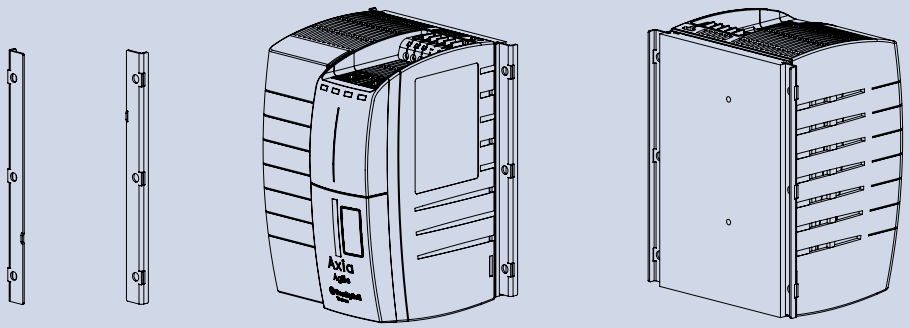

EMC screen sheet

The EMC screen plate for cable fastening provides reliable mounting and secure fixation of cables resulting in an improved electromagnetic compatibility. By ensuring large-area contact between the cable shield and the plate, electromagnetic interference is effectively reduced, supporting compliance with EMC standards and enhancing system reliability.

Line choke

The simplest way to reduce high harmonic components and hence reactive power is connecting a choke in series on the mains side of the inverter. Depending on the system, reactive power consumption can be reduced by approximately 20% of the figure without line choke.

The line choke increases inductance towards the mains. Mains feed line choke can be regarded as sufficient if short-circuit power is from 20 to 40 times higher than the inverter nominal output.

The inverter is suitable for connection to public or industrial mains supplies in compliance with technical data. If the supply mains transformer output is ≤ 500 kVA, the optional mains choke is needed only if specified in the inverter technical data. The other inverters are suitable for the connection to the mains without a mains choke with relative impedance ≥ 1%. If it is desired to connect more than one inverter, use the sum of the nominal outputs as a basis. Since experience has shown that the nominal short-circuit power on the inverter connection point is often unknown, Bonfiglioli recommends using mains chokes with 4% relative short-circuit voltage.

The relativeshort-circuit voltage equivalent to a 4% voltage drop represents the percentage of the nominal voltage at which a current equal to rated current flows in the case of a short-circuit.

TECHNICAL DATA

Nominal voltages

- AC 1 x 230V +/- 10%
- AC 3 x 230V +/- 10%
- AC 3 x 400V +/- 10%

Frequencies

- 50/60 Hz
- uk (a IN / 50 Hz) 4%

Insulating material class

- T40/F

Ambient temperature

- 40°C

Protection degree (EN 60529)

- IP00

Connection type

- Contact-protected terminals

The line choke must be installed between the mains connection point and the EMI filter. Both the line choke and inverter should be installed on a common metal baseplate and each should be connected to the metal mounting plate and earthed by means of a large contact area copper braid.

Line choke

LCVS006 ... LCVS018

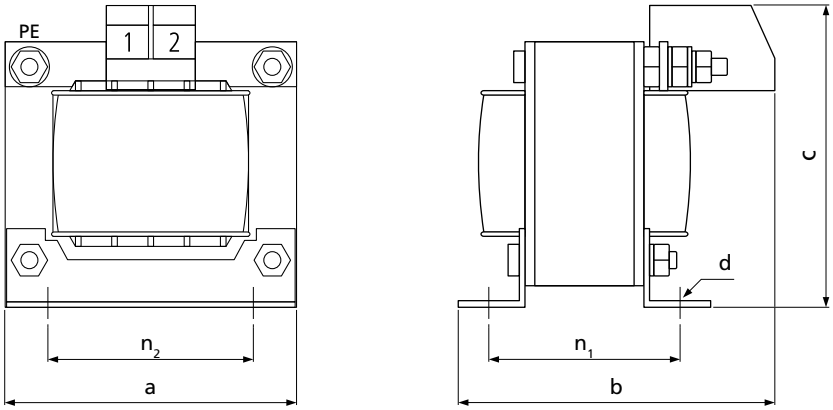

TECHNICAL DATA

AxiaAgile frequency inverter - Line choke combination, **1x230V~**

Inverter type	Line choke	Nominal current	Power dissipation
		[A]	[W]
AXA2xxxk25	LCVS006	6	8
AXA2xxxk37			
AXA2xxxk55			
AXA2xxxk75			
AXA2xxx1k1			
AXA2xxx1k5	LCVS008	8	8
AXA2xxx2k2	LCVS015	15	12
AXA2xxx3k0	LCVS015	15	12
AXA2xxx4k0	LCVS018*	18	15

(*) Usage allowed using the maximum continous line current of 18 A.

TECHNICAL ASSEMBLY DATA

Line choke	Dimensions			Assembly			Weight	Connection terminal		
	a	b	c	n_2	n_2	d				
	[mm]	[mm]	[mm]	[mm]	[mm]	[mm]	[kg]	[mm]	[Nm]	[PE]
LCVS006	60	62	75	44	38	3.6	0.5	0.75-2.5	1.0-1.2	2.5 mm²
LCVS008	60	67	75	44	43	3.6	0.6	0.75-2.5	1.0-1.2	2.5 mm²
LCVS010	66	80	70	50	51	4.8	0.8	0.75-2.5	1.0-1.2	M4
LCVS015	78	78	80	56	49	4.8	1.1	0.75-4.0	1.5-1.8	M4
LCVS018	85	85	95	64	50	4.8	1.8	0.75-4.0	1.5-1.8	M4

LCVT004 ... LCVT025

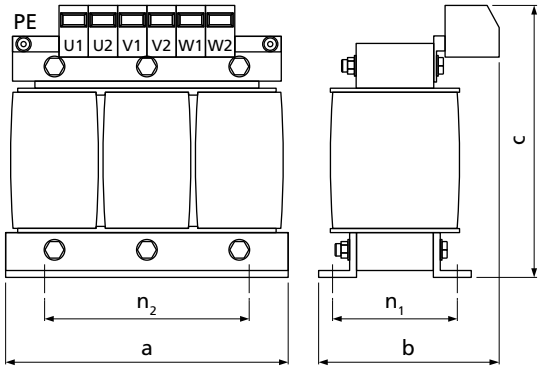

LCVT034

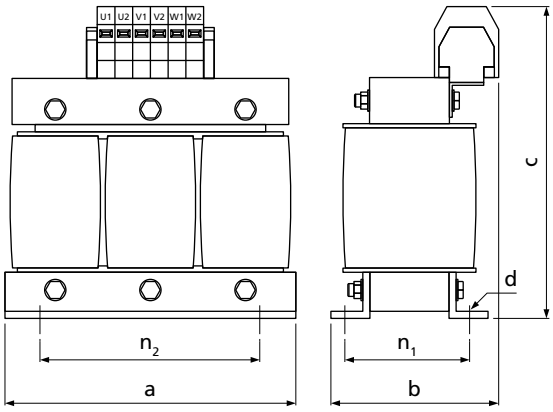

TECHNICAL DATA

AxiaAgile frequency inverter – Line choke combination, **3x230V~**

Inverter type	Line choke	Nominal current	Choke	Power dissipation
		[A]	[mH]	[W]
AXA2xxxk25	LCVT004	4	7.32	20
AXA2xxxk37				
AXA2xxxk55				
AXA2xxxk75				
AXA2xxx1k1	LCVT006	6	4.88	25
AXA2xxx1k5	LCVT008	8	3.66	30
AXA2xxx2k2	LCVT010	15	2.93	30
AXA2xxx3k0	LCVT015	15	1.95	45
AXA2xxx4k0	LCVT018	18	1.63	70
AXA2xxx5k5	LCVT025	25	1.17	70
AXA2xxx7k5	LCVT034	34	0.86	85

Line choke

TECHNICAL DATA

AxiaAgile frequency inverter – Line choke combination, **3x400V~**

Inverter type	Line choke	Nominal current	Choke	Power dissipation
		[A]	[mH]	[W]
AXA4xxxk25	LCVT004	4	7.32	20
AXA4xxxk37				
AXA4xxxk55				
AXA4xxxk75				
AXA4xxx1k1				
AXA4xxx1k5				
AXA4xxx2k2	LCVT006	6	4.88	25
AXA4xxx3k0	LCVT008	8	3.66	30
AXA4xxx4k0	LCVT010	15	2.93	30
AXA4xxx5k5	LCVT015	15	1.95	45
AXA4xxx7k5	LCVT018	18	1.63	70
AXA4xxx9k2	LCVT025	25	1.17	70
AXA4xxx11k	LCVT034	34	0.86	85

TECHNICAL ASSEMBLY DATA

Line choke	Dimensions			Assembly			Weight	Connection terminal		
	a	b	c	n2	n1	d				
	[mm]	[mm]	[mm]	[mm]	[mm]	[mm]	[kg]	[mm]	[Nm]	[PE]
LCVT004	80	65	95	55	37	4	0.8	0.75-2.5	1.0-1.2	4 mm²
LCVT006	100	65	115	60	39	4	1.0	0.75-2.5	1.0-1.2	4 mm²
LCVT008	100	75	115	60	48	4	1.5	0.75-2.5	1.0-1.2	4 mm²
LCVT010	100	75	115	60	48	4	1.5	0.75-2.5	1.0-1.2	4 mm²
LCVT015	125	85	135	100	55	5	3.0	0.75-4.0	1.5-1.8	4 mm²
LCVT018	155	90	135	130	57	8	4.0	0.75-4.0	1.5-1.8	4 mm²
LCVT025	155	100	160	130	57	8	4.0	0.75-10	4.0-4.5	4 mm²
LCVT034	155	100	190	130	57	8	4.5	2.5-16	2.0-4.0	M5

EMI filters

Because of their intrinsic characteristics, all frequency inverters often generate undesired high-frequency voltages generally referred to as “interference”. Mains filters are installed to reduce this interference.

For an overview of device and filter combinations for the respective EMC classifications, refer to the operating instructions.

The reference standard EN 61800-3 defines the thresholds for electromagnetic interference for different classes of equipment.

For AxiaAgile frequency inverters several power sizes of EMI “book filters” are available to fulfill the required EMC behavior. These filters are designed for installation inside the electrical cabinet near the frequency inverter.

Mains filters with very low dispersion currents are available upon request for specific applications.

BASIC CIRCUIT DIAGRAM

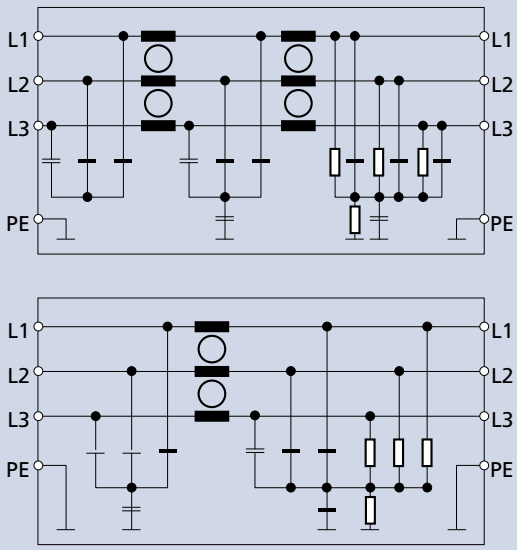

Book type EMI filters

Mains voltage
- AC 3 x 480 V

Rated current
- 7 A ... 30 A

Frequency
- up to 60 Hz

Operating and storage temperature
- -25 °C ... +80 °C (climate class acc. to EN60721-3-3)

Protection degree (EN 60529)
- IP20

Note
Overload capacity is 4 times rated current at switch-on; 1.5 times rated current for 1 minute, once per hour.

Inverter type		EMI filter	Rated current	Leakage current	Power dissipation	Weight
Size	Type		[A]	[mA]	[W]	[kg]
1	**AXA2xxxk25**	HLD 110-500/8	8	20	6	0.8
	AXA2xxxk37					
	AXA2xxxk55					
	AXA2xxxk75					
	AXA2xxx1k1					
	AXA2xxx1k5					
	AXA2xxx2k2					
	AXA4xxxk25					
	AXA4xxxk37					
	AXA4xxxk55					
	AXA4xxxk75					
	AXA4xxx1k1					
	AXA4xxx1k5					
	AXA4xxx2k2					
2	**AXA2xxx3k0**	HLD 110-500/16	16	21	12	1.2
	AXA4xxx4k0					
3	**AXA4xxx5k5**					
	AXA4xxx7k5					
	AXA4xxx9k2					
	AXA4xxx11k	HLD 110-500/30	30	29	15	1.6

DIMENSIONS HLD 110-500/8 ... HLD 110-500/30

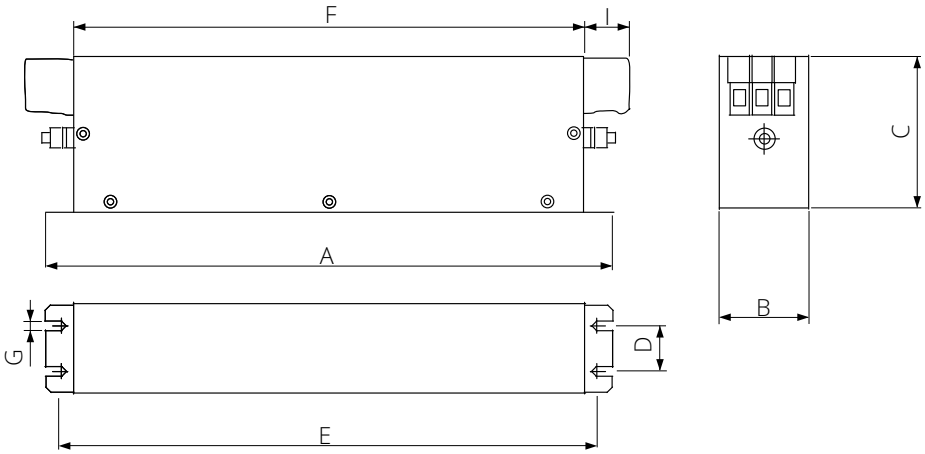

EMC filter	A	B	C	D	E	F	G
				[mm]			
HLD 110-500/8	190	45	75	20	180	166	M5
HLD 110-500/16	250	45	75	20	240	220	M5
HLD 110-500/30	270	55	95	30	255	240	M5

Braking resistors

When speed of an inverter-controlled AC motor is reduced, the motor acts as a generator, feeding back energy to the frequency inverter. As a result, voltage in the DC circuit of the inverter increases. When a specific threshold is exceeded, the energy must flow to an external braking system in order to avoid drive failures. Braking resistors are designed to absorb such energy and to dissipate it into heating. The use of brake resistors allows drives to fulfil the requirements of particularly severe duty cycles, for example those featured by frequent braking, long lasting braking or impulsive braking.

Bonfiglioli offers a wide range of safe and compact braking resistors with IP20 degree of protection: “BR series”.

BR series are designed for panel mounting.

Depending on the brake resistors these are equipped with a thermal switch (see selection table for details).

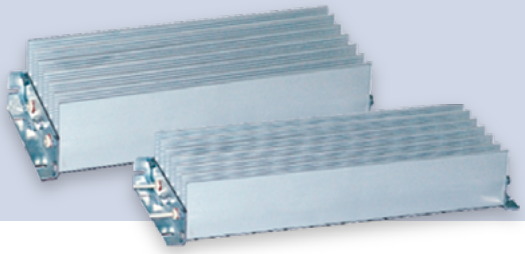

CONNECTION DIAGRAM

R_B = external braking resistor

Bch = brake chopper integrated in standard AxiaAgile inverter

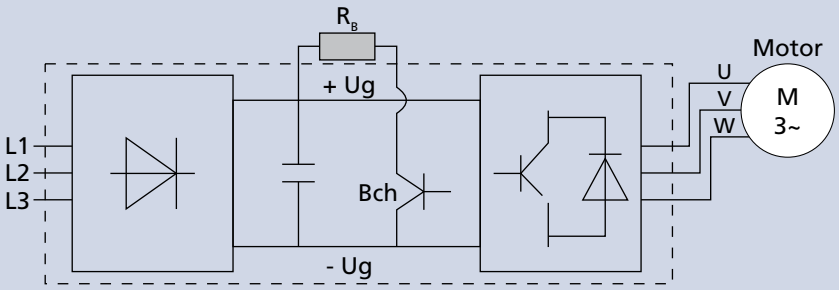

CONNECTION TERMINALS

The R_{b1} and R_{b2} braking resistor terminals on AxiaAgile frequency inverters are located on the X2 power output terminal strip. Access to these terminals on sizes 1 to 4 units is made even easier by the use of disconnectable power terminal strips. Refer to the manual provided with your frequency inverter for further details on materials and connection methods.

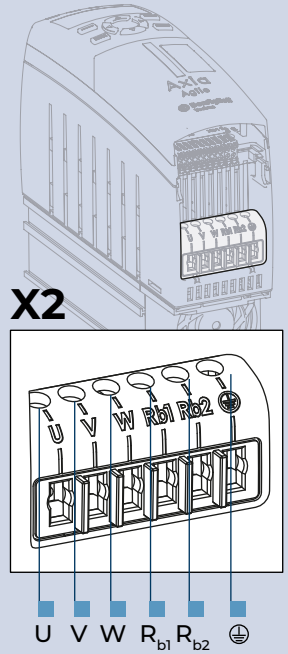

AXIAAGILE DRIVE COMBINATION CHART

These charts show recommended combinations for each model in the AxiaAgile range, and specify the corresponding duty cycles based on the rated drive power. Contact your nearest Bonfiglioli Support Centre for particularly heavy-duty braking applications or if you need to customize a product.

Inverter type		Power (1ph)	Power (3ph)	Bonfiglioli braking resistor	Resistance	Continuous rated power	Duty cycle at the drive's rated power (1ph)	Duty cycle at the drive's rated power (3ph)
Size	Type	[kW]	[kW]		Ohm	[W]	[%]	[%]
1	AXA2xxxk25	0.12	0.25	BR160/100(1)	100	160	100	64
	AXA2xxxk37	0.18	0.37				89	43
	AXA2xxxk55	0.25	0.55				64	29
	AXA2xxxk75	0.37	0.75				43	21
	AXA2xxx1k1	0.55	1.1				29	15
	AXA2xxx1k5	0.75	1.5	BR432/37(1)			57	29
	AXA2xxx2k2	1.1	2.2				39	20
2	AXA2xxx3k0	1.5	3				29	14
	AXA2xxx4k0	2.2	4				20	11
3	AXA2xxx5k5	3	5.5	BR667/24(1)			22	12
	AXA2xxx7k5	3	-	BR667/24(1)			22	-
		-	7.5	2xBR432/37(1)			-	11

Inverter type		Power (3ph)	Bonfiglioli braking resistor	Resistance	Continuous rated power	Duty cycle at the drive's rated power (3ph)
Size	Type	[kW]		Ohm	[W]	[%]
1	AXA2xxxk25	0,25 kW	BR213/300(1)	300	213	85
	AXA2xxxk37	0,37 kW				58
	AXA2xxxk55	0,55 kW				39
	AXA2xxxk75	0,75 kW				28
	AXA2xxx1k1	1,1 kW				19
	AXA2xxx1k5	1,5 kW				14
	AXA2xxx2k2	2,2 kW				10
2	AXA2xxx3k0	3 kW	BR471/136(1)	136	471	16
	AXA2xxx4k0	4 kW				12
2 & 3	AXA2xxx5k5	5,5 kW	BR1330/48(2)	48	1330	24
	AXA2xxx7k5	7,5 kW				18
3	AXA2xxx9k2	9.2 kW				14
	AXA2xxx11k	11 kW				12

(1) Brake resistor is not equipped with a Thermal switch. A thermal switch variant is available.
(2) Brake resistor is equipped with a Thermal switch.

For further information refer to the Bonfiglioli braking resistor catalogue.

R&D Capacity

DESIGN SIMULATION

TESTING LABORATORIES

CO-ENGINEERING

The R&D department at Bonfiglioli develops cutting-edge solutions that integrate the most advanced mechanical, electrical, electronic and hydraulic technologies, responding to the most complex application challenges. **Each R&D center focuses on dedicated product lines, ensuring specialist know-how and tailor-made innovation.**

R&D CENTERS WORLDWIDE

ITALY
Bologna
Rovereto
Forlì

GERMANY
Hattingen
Krefeld

INDIA
Chennai

CHINA
Shanghai

Production: the heart of our company

OUR PRODUCTION SITES COMBINE INNOVATION AND PRECISION, REDEFINING THE CONCEPT OF OPERATIONAL EXCELLENCE.

With a fleet of 200 collaborative, high-capacity robots joining our AGVs/AMRs, we have built a seamlessly integrated **automated production ecosystem**.

We bridge the gap between production and IT infrastructure thanks to end-to-end digital integration, ensuring real-time monitoring and data-driven optimization.

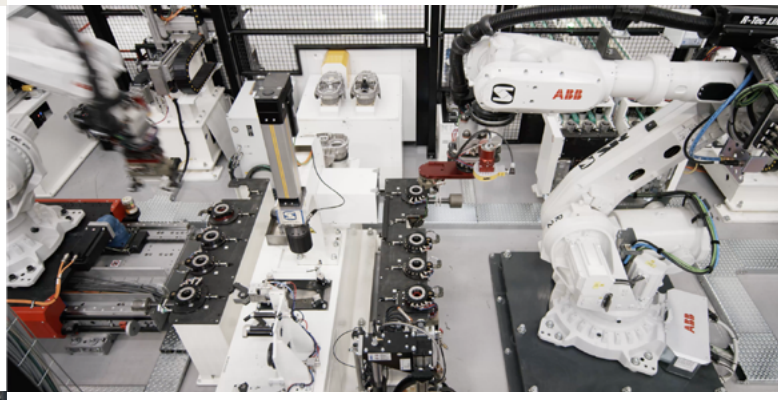

From smart picking in our **advanced warehouses** to dynamic shipping, we guarantee agile, reliable and fast global delivery.

Our worldwide presence

Thanks to an international network of closely interconnected commercial and production sites, we can guarantee the same high standards of Bonfiglioli quality anywhere at any given time. We know that our direct presence in local markets is the key to long-lasting success, so our family includes 18 production sites, 24 commercial sites and more than 550 distributors around the world.

Our organization is always close by, offering complete and efficient solutions and supporting our customers with dedicated services, co-engineering and after-sales assistance.

18 PRODUCTION SITES

24 COMMERCIAL SITES

80 COUNTRIES

550 DISTRIBUTORS

~5,000 PEOPLE

VE_CAT_AXA_STD_ENG_R00_0

Bonfiglioli global locations

AUSTRALIA
Bonfiglioli Transmission (Aust.) Pty Ltd
Plumpton NSW

BRAZIL
Bonfiglioli Redutores do Brasil Ltda
São Bernardo do Campo - São Paulo

CHINA
Bonfiglioli Drives (Shanghai) Co. Ltd.
Shanghai

Selcom Electronics (Shanghai) Co., Ltd
Shanghai

Shanghai

FRANCE
Bonfiglioli Transmission S.A.S.
Marly la Ville

GERMANY
Bonfiglioli Deutschland GmbH
Neuss

Bonfiglioli Deutschland GmbH
Krefeld

O&K Antriebstechnik GmbH
Hattingen

INDIA
Bonfiglioli Transmission Ltd.
Mobility & Wind Industries
Thirumudivakkam
Kancheepuram - Tamil Nadu

Industry & Automation Solutions
Mannur Village, Sriperumbudur Taluk
Kancheepuram - Tamil Nadu

Industry & Automation Solutions
Pune - Maharashtra

ITALY
Bonfiglioli Riduttori S.p.A.
Industry & Automation Solutions
Calderara di Reno (BO)

Industry & Automation Solutions
Carpiano

Mobility & Wind Industries
Forlì

Industry & Automation Solutions
Rovereto

Selcom Group S.p.A.
Castel Maggiore (BO)

Castel Maggiore (BO)

Cadriano (BO)

NEW ZEALAND
Bonfiglioli Transmission (Aust.) Pty Ltd
Auckland - Ellerslie

SINGAPORE
Bonfiglioli South East Asia Pte Ltd
Singapore

SLOVAKIA
Bonfiglioli Slovakia s.r.o.
Považská Bystrica

SOUTH AFRICA
Bonfiglioli South Africa Pty Ltd.
Johannesburg

SOUTH KOREA
Bonfiglioli Korea Co., Ltd.
Busan

SPAIN
Tecnotrans Bonfiglioli S.A
Castellbisbal - Barcelona

TURKEY
Bonfiglioli Türkiye Jsc
Çiğli - Izmir

UNITED KINGDOM
Bonfiglioli UK Ltd.
Warrington - Cheshire

USA
Bonfiglioli USA Inc.
Hebron - Kentucky

VIETNAM
Bonfiglioli Vietnam Co. Ltd.
Ben Cat city, Binh Duong province

PRODUCTION | ASSEMBLY | SALES | SERVICE

We have a relentless commitment to excellence, innovation & sustainability. Our team creates, distributes and services world-class power transmission & drive solutions to keep the world in motion.

HEADQUARTERS

Bonfiglioli S.p.A.
Via Cav. Clementino Bonfiglioli, 1
40012 Calderara di Reno - Bologna (Italy)
Tel. +39 051 6473111